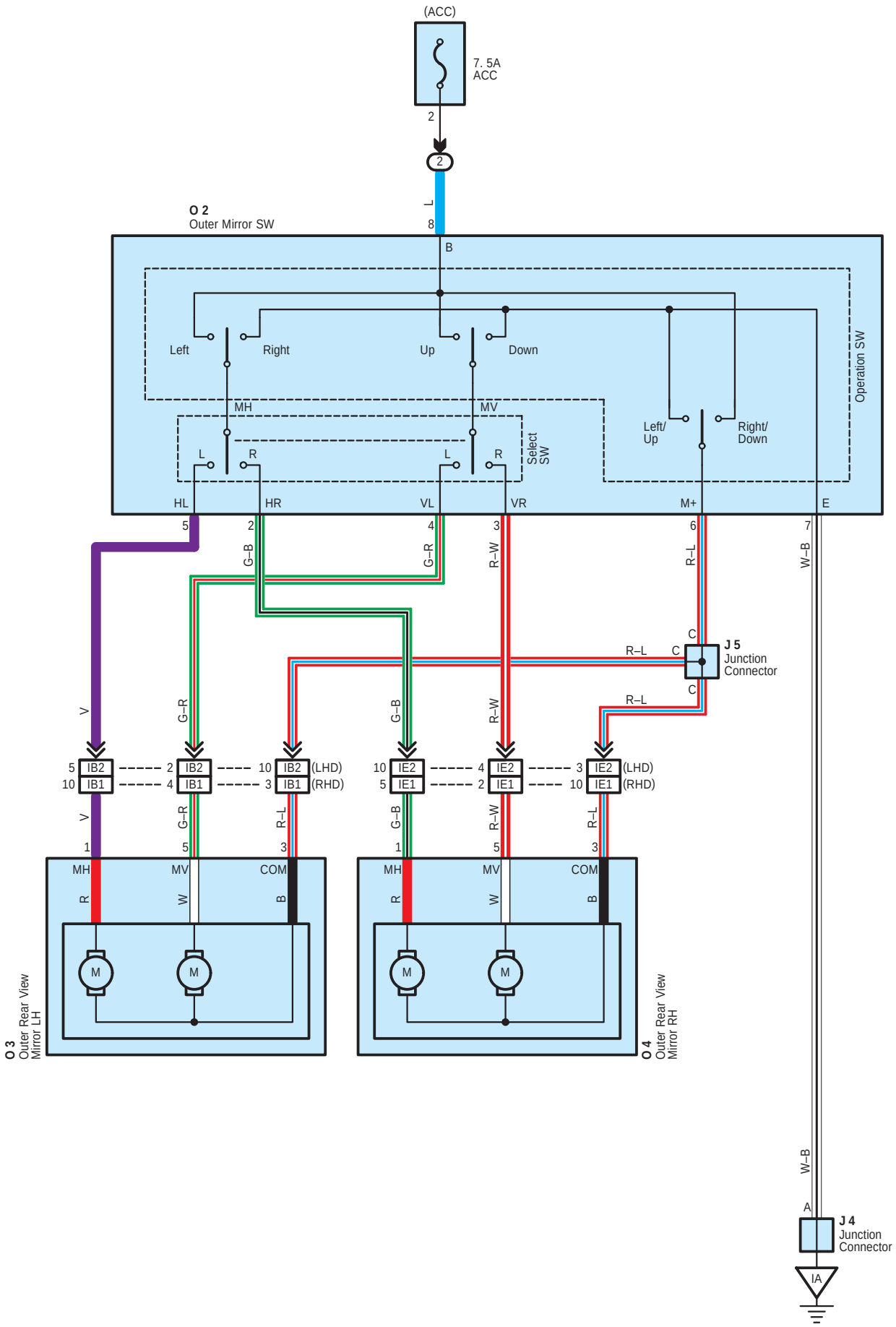
(ACC)
7. 5A
ACC
2
2
L
8
O 2
Outer Mirror SW
B
Left
Right
Up
Down
Operation SW
MH
MV
Left/
Up
Right/
Down
L
R
L
R
Select
SW
HL
HR
VL
VR
M+
E
5
2
4
3
6
7
G–B
G–R
R–W
R–L
W–B
C
R–L
C
J 5
Junction
Connector
C
R–L
V
G–R
G–B
R–W
5 IB2
10 IB1
2 IB2
4 IB1
10 IB2 (LHD)
3 IB1 (RHD)
10 IE2
5 IE1
4 IE2
2 IE1
3 IE2 (LHD)
10 IE1 (RHD)
V
G–R
R–L
G–B
R–W
R–L
1
5
3
1
5
3
MH
MV
COM
MH
MV
COM
R
W
B
R
W
B
M
M
M
M
O 3
Outer Rear View
Mirror LH
O 4
Outer Rear View
Mirror RH
W–B
A
J 4
Junction
Connector
IA

: Parts Location

Code	See Page	Code	See Page	Code	See Page
J4	29 (LHD)	J5	39 (*6)	O3	40 (RHD)
	37 (*5)	O2	29 (LHD)	O4	30 (LHD)
	39 (*6)		37 (*5)		40 (RHD)
J5	29 (LHD)		39 (*6)		
	37 (*5)	O3	30 (LHD)		

: Relay Blocks

Code	See Page	Relay Blocks (Relay Block Location)
2	23 (LHD)	Fuse Block (Left Kick Panel)
	23 (RHD)	Fuse Block (Right Kick Panel)

: Connector Joining Wire Harness and Wire Harness

Code	See Page	Joining Wire Harness and Wire Harness (Connector Location)
IB1	48 (*5)	Front Door LH Wire and Instrument Panel Wire (Left Kick Panel)
	49 (*6)	
IB2	44 (LHD)	
IE1	48 (*5)	Front Door RH Wire and Instrument Panel Wire (Right Kick Panel)
	49 (*6)	
IE2	44 (LHD)	

: Ground Points

Code	See Page	Ground Points Location
IA	44 (LHD)	Right Kick Panel
	48 (*5)	Left Kick Panel
	49 (*6)	

* 1 : LHD 3SZ–VE * 2 : LHD K3–VE * 3 : RHD 3SZ–VE * 4 : RHD K3–VE * 5 : RHD w/ Heater * 6 : RHD w/o Heater